Electrolux PROFESSIONAL

Digital Undercounter Refrigerated Counter Saladette - 250lt, 2 Doors with lid and chopping board (R290)

ITEM #

MODEL #

NAME #

SIS #

AIA #



725107 (SAL25L2C9) 2-door refrigerated Saladette with lid and chopping board 250lt, +2+10° C, AISI 304

Short Form Specification

Item No.

Constructed entirely in 304 AISI stainless steel. High-density expanded polyurethane foam, 45 mm in thickness, with cyclopenthane injection. Height-adjustable feet. Hinged lid on top. Lower refrigerated compartment designed to accommodate GN 1/1 containers and equipped with N. 2 hinged doors. Built-in refrigeration unit. Ventilated. Refrigerant R290. Digital control panel. Automatic evaporation of defrost water. Suitable to operate in ambient temperatures up to +43°C. Temperature range: 0+10°C. CFC and HCFC free.
Supplied with n.9 horizontal container supports and n.1 non-toxic plastic chopping board.

APPROVAL:

Main Features

- Forced air circulation for rapid cooling and an even temperature distribution.
- Automatic evaporation of defrost water. Prearrangement for drain outlet.
- Digital control panel.
- Equipped with hinged lid for non-operating periods.
- Anti-tilt runners accept GN 1/1 containers.
- A kit of wheels is available as optional accessory for easier movement.
- Adjustable temperature range from 0°C to +10° C.
- Tropicalized unit.

Construction

- IPX3 protected.
- Adjustable feet 66-88 mm (see optional accessory).
- Built-in compressor to suit operating conditions.
- Constructed from AISI 304 Stainless steel throughout to meet the highest hygiene standards.
- Developed and produced in ISO 9001 and ISO 14001 certified factory.
- Mounted on legs with height adjustment.
- Rounded internal corners for ease of cleaning.
- Access to all components from the front.
- [NOT TRANSLATED]

User Interface & Data Management

- Connect the product (with accessory) to the OneConnected Platform via Wi Fi or ethernet connection for a seamless remote experience. Real-time monitoring and analytics, alarm management, HACCP data management, APIs, and advanced features keep your fridge fully under control.

Sustainability

- CFC and HCFC free, highly ecological refrigerant type: R290 (ecological gas in foam: cyclopentane). Hydrocarbon refrigerant gas R290 for the lowest environmental impact (GWP=3), to reduce green house and ozone depletion effects.
- 50 mm insulation for energy saving.

Optional Accessories

- Kit 4 wheels for 250lt refrigerated counter, saladette PNC 880267 ❑
- Feet to reach 900mm height for 250lt saladette PNC 881254 ❑
- 1/1GN grey rilsan grid PNC 881435 ❑

Digital Undercounter Refrigerated Counter Saladette - 250lt, 2 Doors with lid and chopping board (R290)

Front

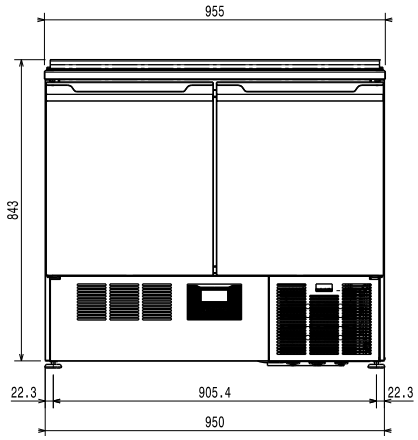

Side

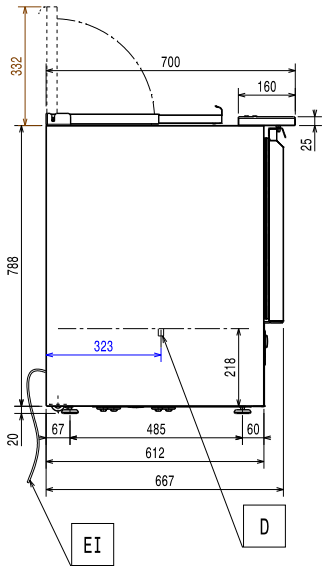

EI = Electrical inlet (power)

Top

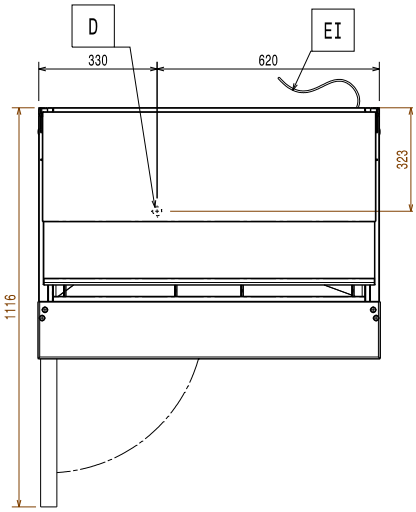

Electric

Supply voltage:	220-240 V/1 ph/50 Hz

Key Information:

Built-in Compressor and Refrigeration Unit

Door hinges:	
External dimensions, Width:	950 mm
External dimensions, Depth:	700 mm
External dimensions, Height:	863 mm
Depth with doors open:	1120 mm

Refrigeration Data

Compressor power:	1/4 hp

ISO Certificates

ISO Standards:	ISO 9001; ISO 14001; ISO 45001; ISO 50001

Sustainability

Refrigerant type:	R290
Refrigeration power:	314 W
Refrigerant weight:	50 g

The company reserves the right to make modifications to the products without prior notice. All information correct at time of printing.